IDETC -CIE

International Design Engineering Technical Conferences & Computers and Information in Engineering Conference

Hilton Anaheim, Anaheim, CA

WISCONSIN
UNIVERSITY OF WISCONSIN–MADISON

Tutorial 1
Learning Topology Optimization Through Examples and Case Studies

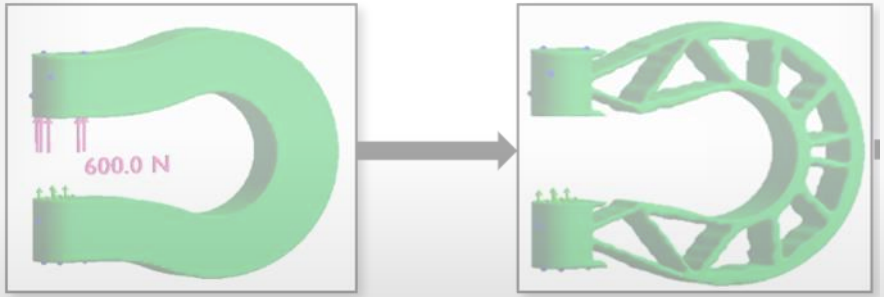

Initial Design TO Model

August 18, 2019

Problem 1: Drone Frame Optimization

DJI "Phantom 3" with camera

Airborne Drone "the Walker" with package

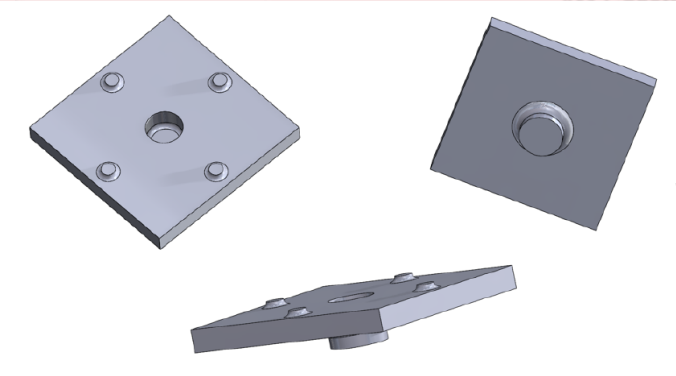

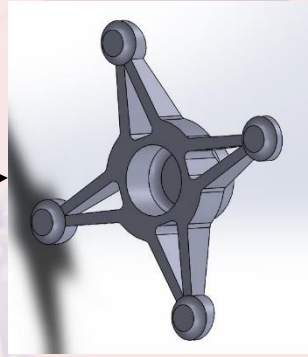

Results

	Final Volume Percentage
Drone Frame Topology Optimization	19.45%
	17.00%
	16.50%
	14.50%
	15.89%
	16.38%
	14.85%
	14.28%
	13.26%
	19.40%
	11.70%
	15.20%
	13.76%
	13.84%
	13.28%
	12.68%
	14.60%
	18.00%
	15.89%
	14.90%
Average	15.3%
Max	19.45%
Min	11.70%

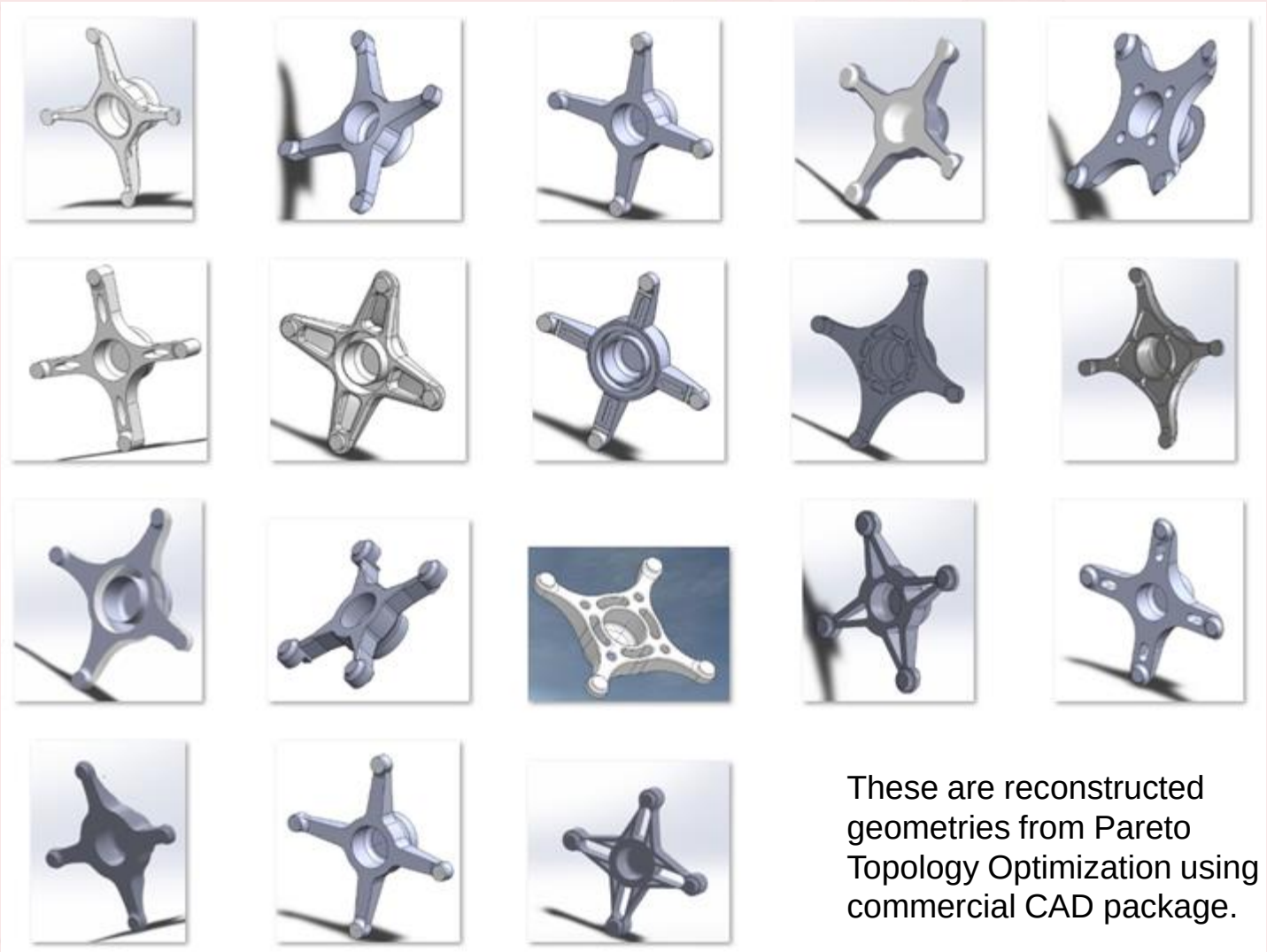

These are reconstructed geometries from Pareto Topology Optimization using commercial CAD package.

Results_Assembly